SIGN	DESCRIPTON	DATE	APPROVER

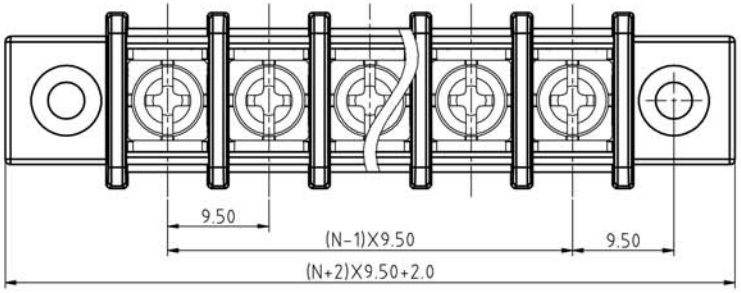

N=Number of contacts

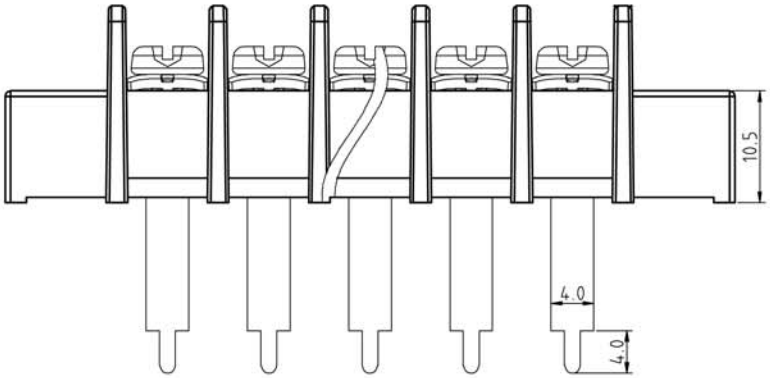

P.C.B LAYOUT

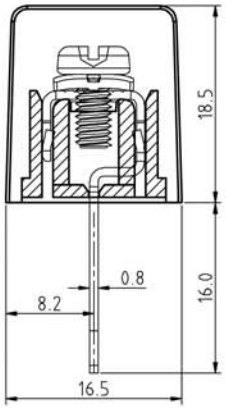

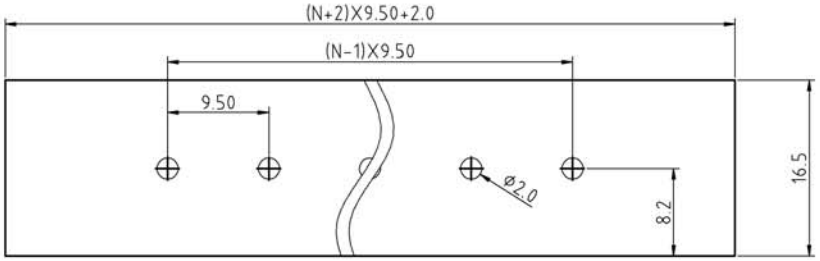

Technical Data:

Material:

Terminals:Copper Alloy,Tin Plated

Terminal screw: Steel galvanized with Cr3+ plated

Insulator body(housing): Polyamide (Glass filled)(UL94V-0)

Electrical

Voltage rating: 300VAC

Current rating: 25 Amps/way max

Contact resistance: 20m Ω (max)

Withstanding Voltage: 2500VAC(1min) Test time=60sec/1pcs

Wire range: 12-22AWG

Mechanical:

Torque: 10kgf.cm/M3.5

Operating temperature: -40°Cto+105°C

Soldring reliability:

Test temperature= 250°C±10°C

5 seconds max

Ordering Information:

U111 - A - 9 XX - X X X 0

- A Black Pa66
- B Black Pbt
- 1 With flange
- 2 Without flange
- 1 "-"Screw Cr^{3+}
- 2 "-/+"Screw Cr^{3+}
- 3 "-"Screw Ni Plated
- 4 "-/+"Screw Ni Plated
- 02 To 32 — 2Pin To 32Pin

WELINK 上海拓尔普电子科技有限公司 Welink International Co.,LTD.

TOLERANCE X. ±0.50 X.X ±0.30 X.XX ±0.20 X° ±1°	APPROVED:		NAME: U111-A Pitch 9.5mm series With flange
	CHECKED:		
	DRAWN: Yang Ming 2011,07,15		
	UNITS: mm	REV: A	PART NO: U111A9XX21B0
	SCALE: 2 / 1	PAGE: 1 / 1	DWG NO: 9U111A001A