SIGN	DESCRIPTON	DATE	APPROVER

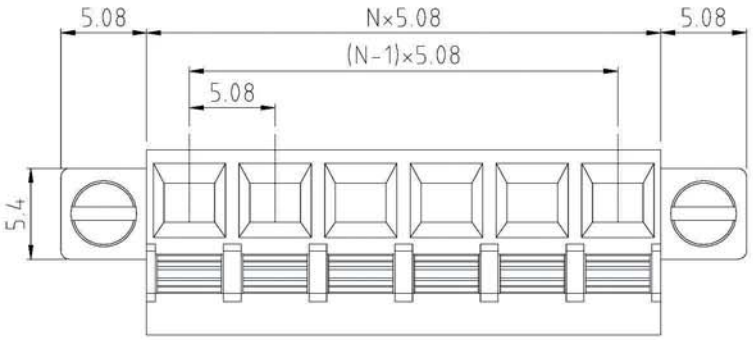

N=Number of contacts

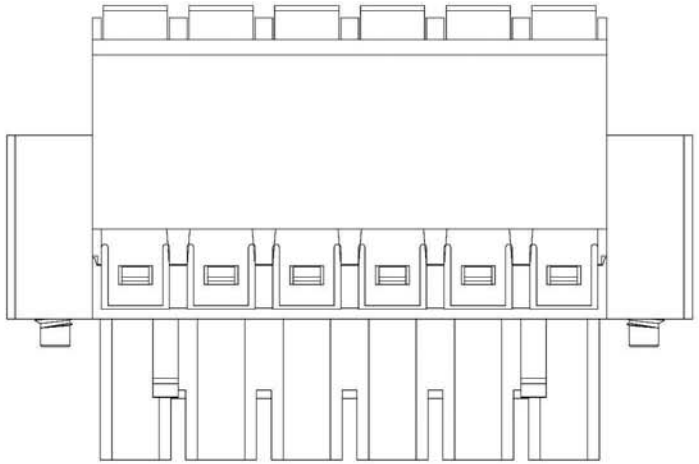

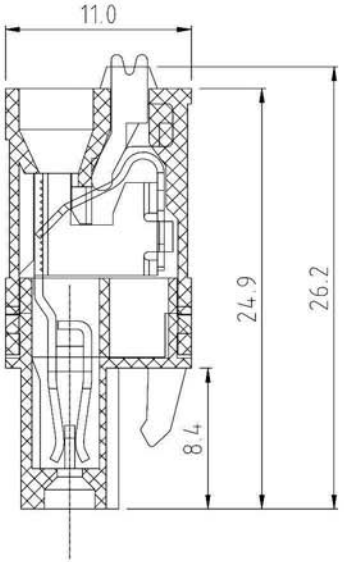

Technical Data:
Material:
Terminal: Copper Alloy Tin plated
Wire guard: Stainless steel
Insulator body(housing): Polyamide(UL94V-0)
Electrical:
Voltage rating: 300VAC
Current rating: 16 Amps/way max
Contact resistance: 20mΩ (max)
Withstanding Voltage: 2500VAC(1min) Test time=60sec/1pcs
Wire range: 12-26AWG
Mechanical:
Operating temperature: -40°C to +105°C
Soldring reliability:
Test temperature= 250°C±10°C
5 seconds max
Ordering Information:
F75-L-E XX-0 0 1 X 0 0 0 0

XX: 2 ~ 24 / 02 ~ 24

X: 5 Green / 6 Blue

WELINK 上海拓尔普电子科技有限公司
Welink International Co.,LTD.

TOLERANCE		APPROVED:		NAME:	F75-L -Pitch 5.08mm -Series (加耳扣螺丝)
X.	±0.50	CHECKED:			
X.X	±0.30	DRAWN: Ling Yu	2016.04.18		
X.XX	±0.20	UNITS: mm	REV: A	PART NO:	F75LEXX001X0000
X°	±1°	SCALE: 3 / 1	PAGE: 1 / 1	DWG NO:	9F75LE011A